Sequential two groupsLED Pattern Generator Using NE555 and CD4017
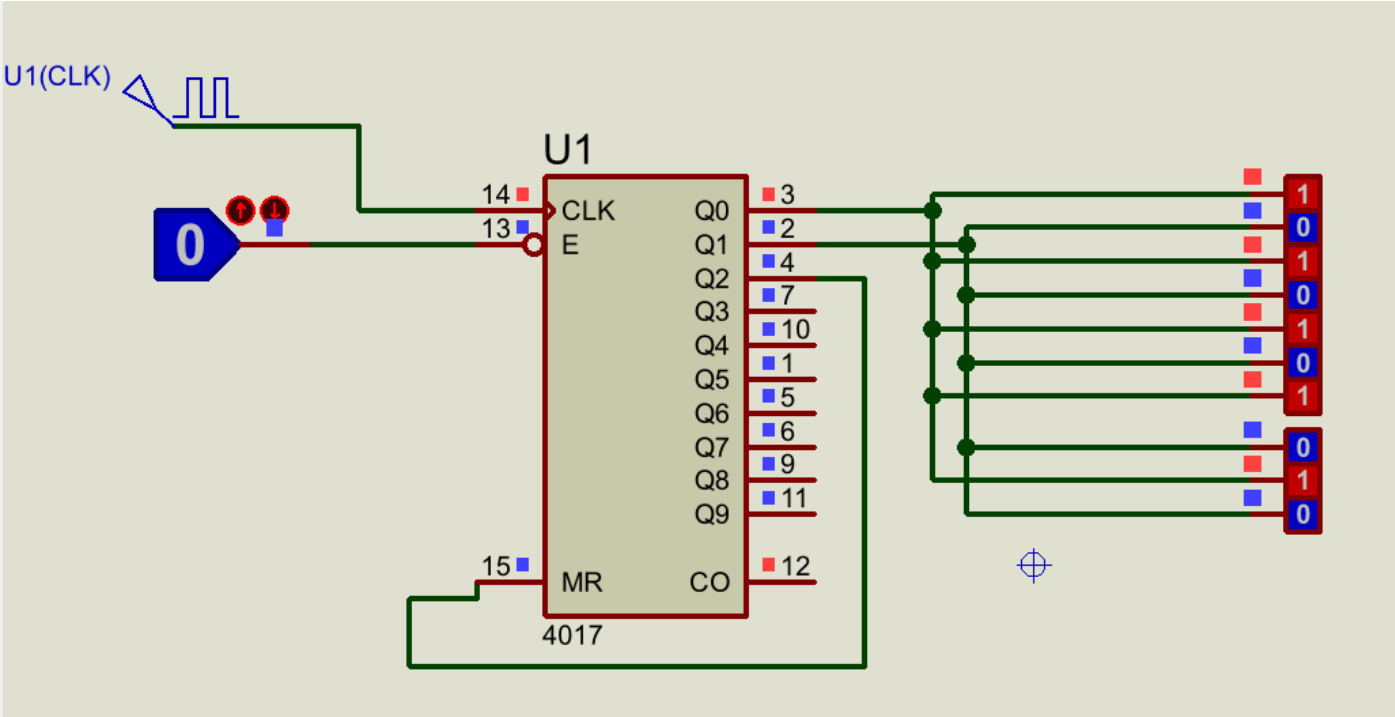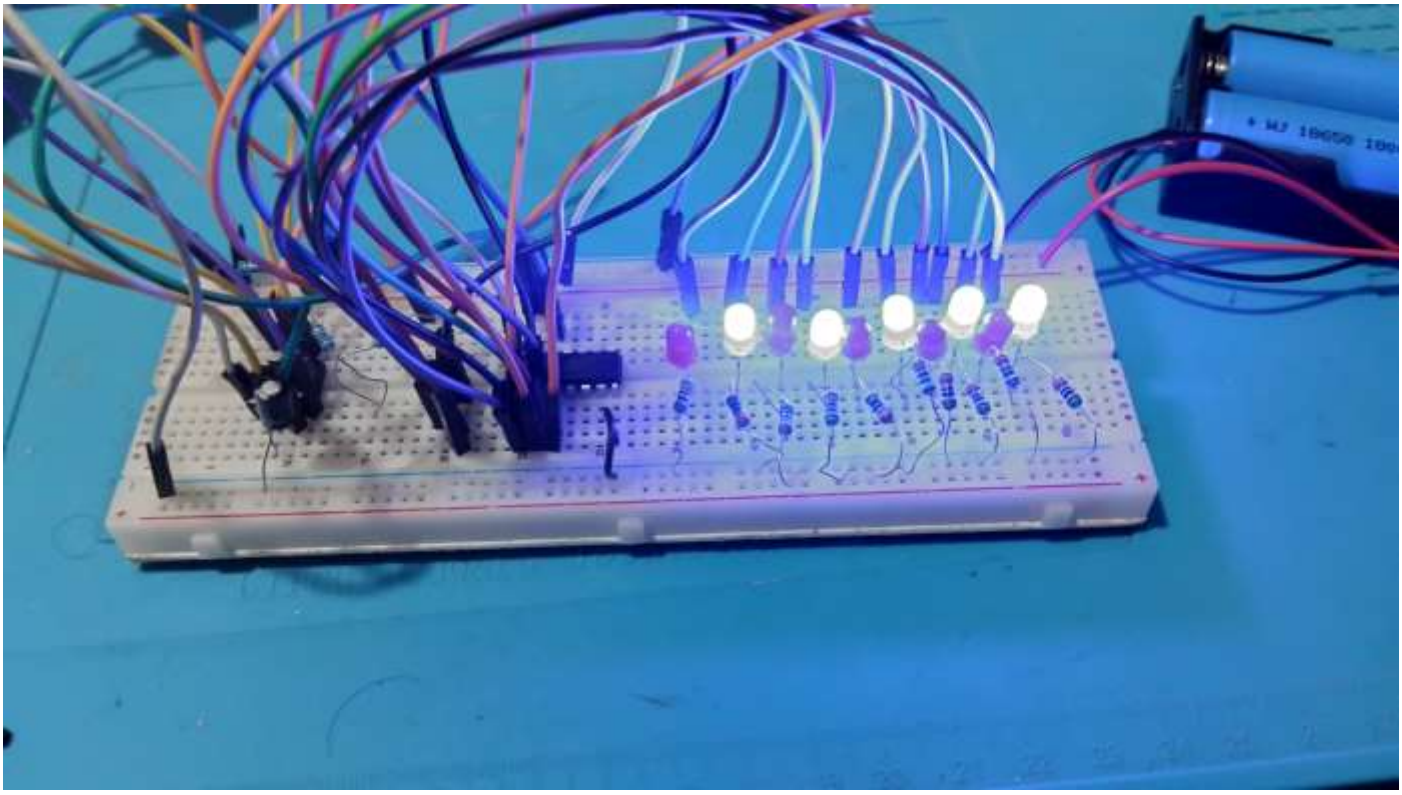
This project demonstrates a sequential LED pattern generator using the NE555 timer IC in astable mode as a clock source and the CD4017 decade counter to produce a counted sequence.